PC-G1

Pendant Cap for DS-2CD6D54G1-IZS PanoVu Camera

- Aluminum Alloy Material with Surface Spray Treatment
- Waterproof Design

NOTE: The actual bracket may vary from the picture above.

Specifications

	PC-G1
Appearance	Hikvision white
Application	DS-2CD6D54G1-IZS PanoVu camera pendant cap
Material	ADC12
Dimension	9.84" x 2.64" (250 mm x 67 mm)
Weight	1.33 lbs (0.6018 kg)

NOTES: Pay attention to color matching.

Order model:
PC-G1

Dimensions

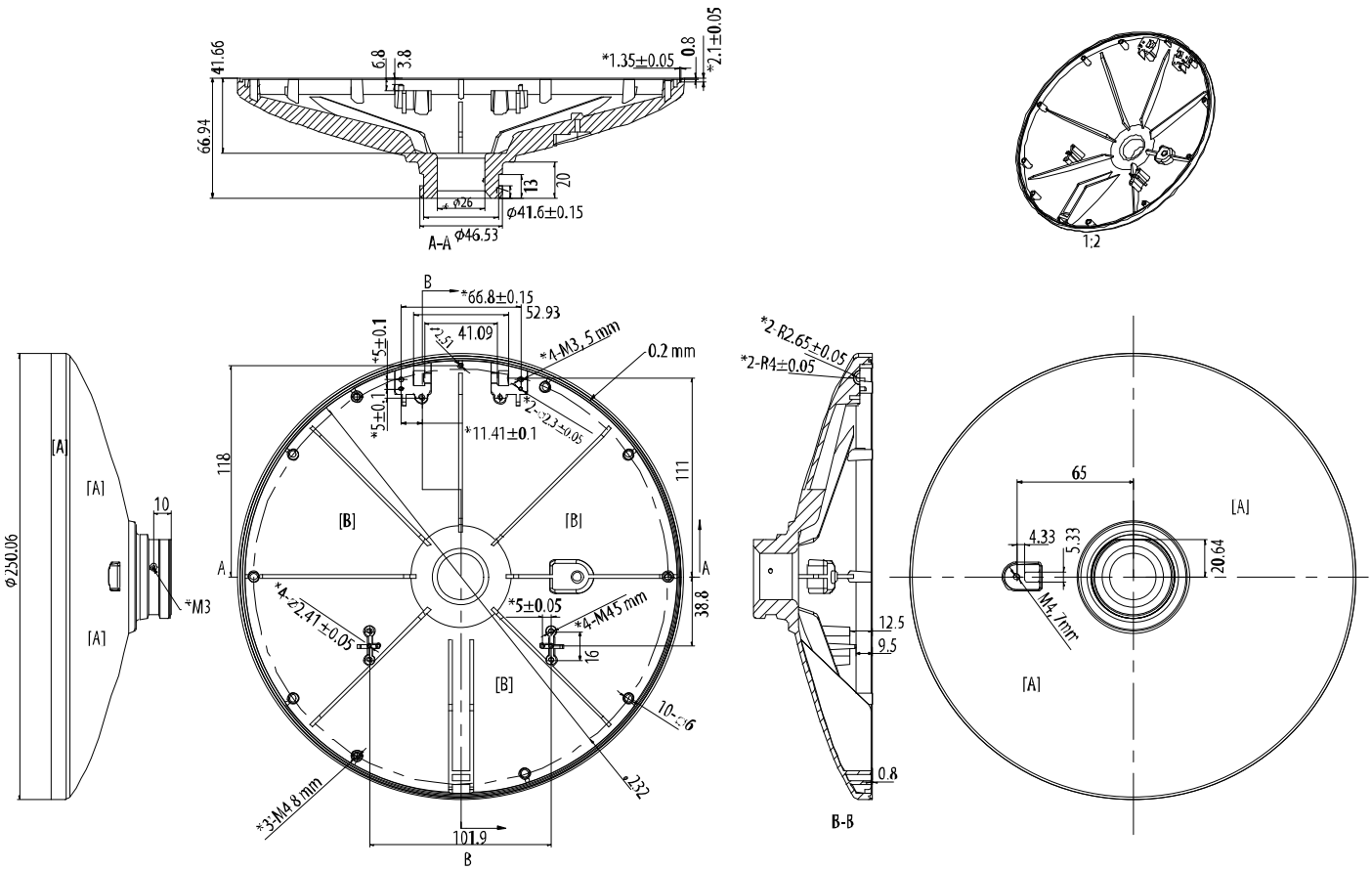

© 2015—2019 Hikvision USA Inc. • All Rights Reserved • Specifications subject to change without notice.
Hikvision USA Inc., 18639 Railroad Street, City of Industry, CA 91748, USA • Hikvision Canada, 4848 rue Levy, St-Laurent, Quebec, Canada, H4R 2P1
Tel: +1-909-895-0400 • Toll Free in USA: +1-866-200-6690 • E-Mail: sales.usa@hikvision.com • www.hikvision.com
121019NA