DS-2DP0818ZIX-D

PanoVu Series 180° Panoramic + PTZ Outdoor Camera

- 4-ch Multi-Directional Panoramic Images and 1-ch Close-Up Image
- 1-ch Audio Input and 1-ch Audio Output
- H.265+ Video Compression
- MicroSD/SDHC/SDXC Card Slot, up to 128 GB

Panoramic Camera

- Four 1/1.8" Progressive Scan CMOS
- 4096 x 1800 @ 30 fps Resolution
- Horizontal FOV: 180°
- Vertical FOV: 80°
- Four Panoramic IP Lights

Tracking PTZ Camera

- 1/1.8" Progressive Scan CMOS
- 1920 × 1080 @ 30 fps Resolution
- 36x Optical Zoom, 16x Digital Zoom
- Pan and Tilt Range: 360° (Pan), -15° to 90° (Tilt)
- IR Distance: 656 ft (200 m)

Hikvision's PanoVu DS-2DP0818ZIX-D PanoVu Series Network PTZ Camera, with integrated panoramic and PTZ cameras, is able to capture 180° images with the four panoramic cameras, as well as detailed close-up images with the PTZ camera.

Other features include H.265+ video compression, audio I/O, an internal microSD memory card slot (up to 128 GB), and IR with a 656 ft (200 m) range.

Available Models

DS-2DP0818ZIX-D

Specifications

Camera Module	
One-Touch Link	Supported
Tracking Mode	Manual/auto/mix
Multiple Targets Tracking	Supported
Number of Targets	Up to 30 targets can be detected at the same time
Target Switch Time	<1 s
Calibration	Manual/auto
Tracking Duration	Up to 60 s
Sensitivity Settings	Supported
Panoramic Camera	
Image Sensor	4 x 1/1.8" progressive scan CMOS
Minimum Illumination	Color: 0.005 lux @ (f/2.0, AGC on), B/W: 0.0005 lux @ (f/2.0, AGC on)
Lens	5.0 mm, f/2.0
Field of View	Horizontal : 180°, vertical: 80°
3D DNR	Supported
HLC	Supported
Video Compression	Main stream: H.265+/H.265/H.264+/H.264; sub-stream: H.265/H.264/MJPEG; third stream: H.265/H.264
Main Stream Resolution	20:9–30 fps (4096 × 1800, 3840 × 1680, 2720 × 1192) 20:6–30 fps (4096 × 1200, 3840 × 1080, 2720 × 800)
Sub-Stream Resolution	20:9–30 fps (704 × 320, 512 × 232) 20:6–30 fps (704 × 200)
Third Stream Resolution	20:9–30 fps (2048 × 896, 1280 × 560, 704 × 320, 512 × 232) 20:6–30 fps (2048 × 600, 1280 × 376, 704 × 200)
Basic Event Detection	Motion detection
Smart Event Detection	Intrusion detection, line crossing detection, region entrance detection, region exiting detection
PTZ Camera	
Image Sensor	1/1.8" progressive scan CMOS
Minimum Illumination	Color: 0.002 lux @ (f/1.5, AGC on); B/W: 0.0002 lux @ (f/1.5, AGC on); 0 lux with IR
IR Range	656 ft (200 m); IR brightness and angle are adjustable
S/N Ratio	≥55 dB
3D DNR	Supported
Smart Image Enhancement	Optical WDR, optical defog, HLC, Smart IR, EIS
Focal Length	5.6 mm to 208 mm, 36× optical zoom
Zoom Speed	Approximately 6.6 s (optical wide-tele)
Horizontal FOV	62.5° to 1.9° (wide-tele)
Minimum Working Distance	10 mm to 1500 mm (wide-tele)
Aperture Range	f/1.5 to f/4.5
Pan and Tilt Range	Pan: 360°, tilt: -15° to 90°
Pan and Tilt Speed	Pan manual speed: 0.1°/s to 210°/s (configurable), pan preset speed: 240°/s Tilt manual speed: 0.1°/s to 150°/s (configurable), tilt preset speed: 200°/s
Preset Number	300
Patrol	8 patrols, up to 32 presets per patrol
Pattern	4 patterns, with the recording time not less than 10 minutes per pattern
Park Action	Preset/pattern scan/patrol scan/auto scan/tilt scan/random scan/frame scan/panorama scan
Scheduled Task	Preset/pattern scan/patrol scan/auto scan/tilt scan/random scan/frame scan/panorama scan/dome reboot/dome adjust/aux output
Power-Off Memory	Supported
3D Positioning	Supported
Video Compression	Main stream: H.265+/H.265/H.264+/H.264, sub-stream: H.265/ H.264/MJPEG, third stream: H.265/H.264
Main Stream Resolution	30 fps (1920 × 1080, 1280 × 960, 1280 × 720)
Sub-Stream Resolution	30 fps (704 × 480, 640 × 480, 352 × 240)
Third Stream Resolution	30 fps (1920 × 1080, 1280 × 960, 1280 × 720, 704 × 480, 640 × 480, 352 × 240)
Target Filtering	People and vehicles are classified and filtered separately
Basic Event Detection	Motion detection, video tampering detection, HDD full, HDD error, network disconnected, IP address conflicted, illegal login
Smart Event Detection	Intrusion detection, line crossing detection, region entrance detection, region exiting detection, face detection, audio exception detection

© 2018–2019 Hikvision USA Inc. • All Rights Reserved • Specifications subject to change without notice.
Hikvision USA Inc., 18639 Railroad Street, City of Industry, CA 91748, USA • Hikvision Canada, 4848 rue Levy, St-Laurent, Quebec, Canada, H4R 2P1
Tel: +1-909-895-0400 • Toll Free in USA: +1-866-200-6690 • E-Mail: sales.usa@hikvision.com • www.hikvision.com

Specifications (continued)

Network	
Audio Compression	G.711alaw/G.711ulaw/G.722.1/G.726/MP2L2/PCM
Protocols	TCP/IP, IPv4/IPv6, HTTP, HTTPS, 802.1x, QoS, FTP, SMTP, UPnP, SNMP, DNS, DDNS, NTP, RTSP, RTCP, RTP, TCP, UDP, IGMP, ICMP, DHCP, PPPoE, Bonjour
API	Open-ended, supports ONVIF, HIKVISION SDK, and third-party management platforms
System Interface	
Network Interface	1 self-adaptive Ethernet interface
Fiber Cable	1-port 1000M FC interface, TX1310/RX1550 nm wavelength, 20 km transmission distance
RS-485	Half-duplex, HIKVISION, Pelco-P and Pelco-D self-adaptive
BNC	1.0 V [p-p]/75 Ω, NTSC (or PAL) composite, BNC
Alarm Input/Output	7-ch alarm input and 2-ch alarm output, supports alarm linkage: preset/patrol scan/memory card recording/aux output/notify surveillance center/upload to FTP/send e-mail
Audio Input/Output	1-ch audio input and 1-ch audio output
Storage	Built-in memory card slot, supports microSD/SDHC/SDXC (up to 128 GB)
General	
Power Supply	36 VDC
Power Consumption	105 W maximum
Working Temperature	Outdoor: -40° to 158° F (-40° to 70° C)
Working Humidity	≤90%
Protection Level	IP66 Standard, TVS 6000V lightning protection, surge protection, and voltage transient protection
Dimensions	Φ15.43" × 15.77" (391.8 mm × 400.5 mm)
Weight	Approximately 39.68 lbs (18 kg)

Dimensions

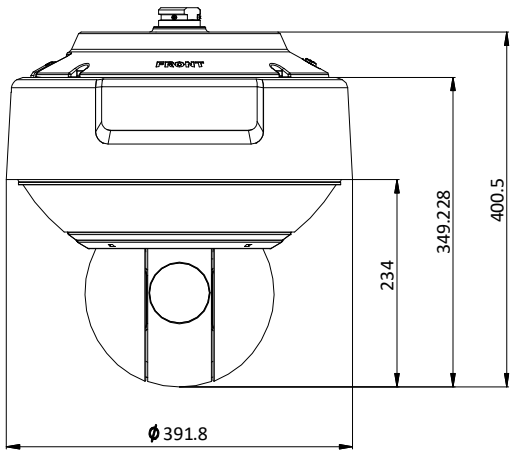

Unit: mm

Accessories

WMP-PV-G
Gray wall mount bracket

CPM-PV-G
Gray pendant mount bracket

CPM20-PV-G
Gray pendant mount bracket

WMP-PV-G
Gray pole mount bracket

CM-G
Gray corner mount

© 2018–2019 Hikvision USA Inc. • All Rights Reserved • Specifications subject to change without notice.
Hikvision USA Inc., 18639 Railroad Street, City of Industry, CA 91748, USA • Hikvision Canada, 4848 rue Levy, St-Laurent, Quebec, Canada, H4R 2P1
Tel: +1-909-895-0400 • Toll Free in USA: +1-866-200-6690 • E-Mail: sales.usa@hikvision.com • www.hikvision.com
Rev. 061919NA